Front heated seat with and without steering wheel heater

From 2002 m. y.

Main fuse

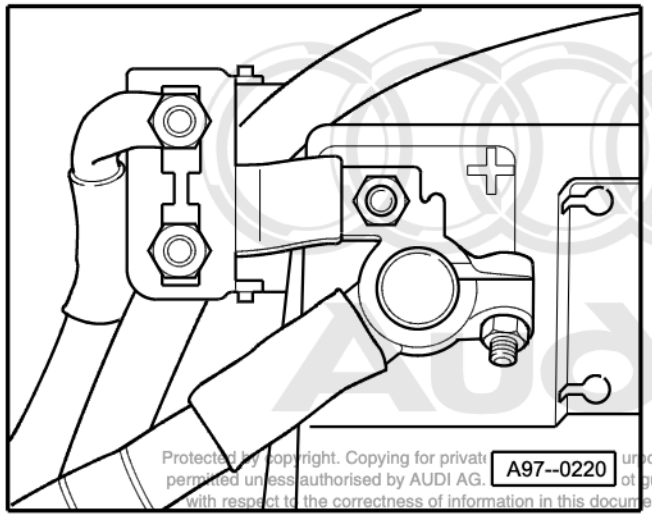

Protected by copyright. Copying for private and commercial purposes, in part or in whole, is not permitted unless authorised by AUDI AG. AUDI AG does not guarantee or accept any liability with respect to the correctness of information in this document. Copyright by AUDI AG.

- on the Battery

Fuse holder

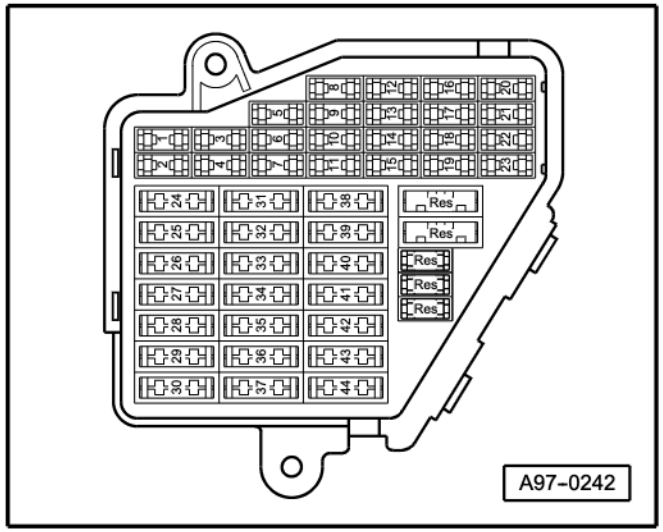

- Instrument panel driver side

Fuse Colors
30 A - Green
25 A - Withe
20 A - Yellow
15 A - Blue
10 A - Red
7,5 A - Brown
5 A - Beige

Note:

- *Fuse in fusebox from 23 onwards are numbered 223 onwards in Current Flow Diagram.*

4-Pin Relay Carrier with threaded connection

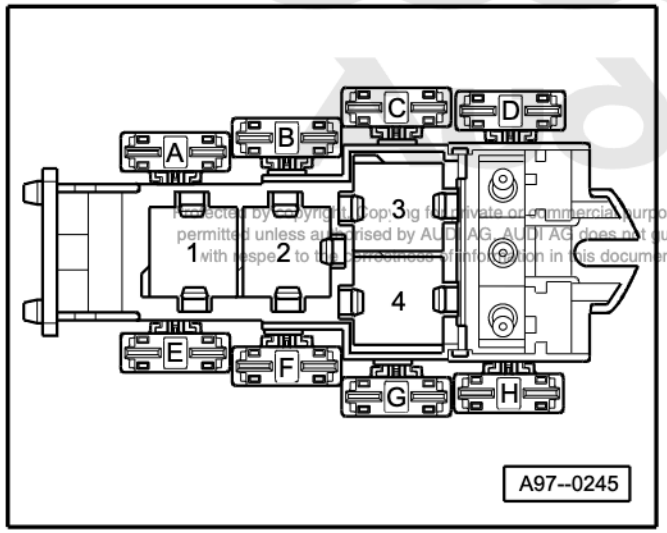

Protected by copyright. Copying for private or commercial purposes, in part or in whole, is not permitted unless authorised by AUDI AG. AUDI AG does not guarantee or accept any liability with respect to the correctness of information in this document. Copyright by AUDI AG.

- Instrument panel driver side

Connector point seat wiring

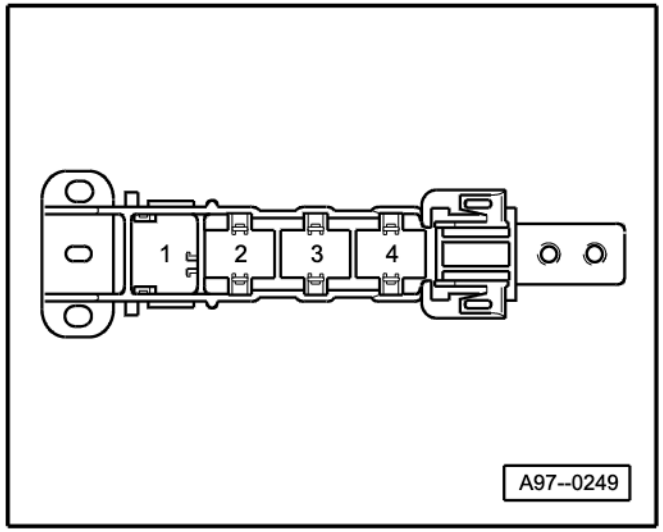

♦ under front passanger's seat

3 - 6-Pin Connector, green (T6e)

Connector point seat wiring

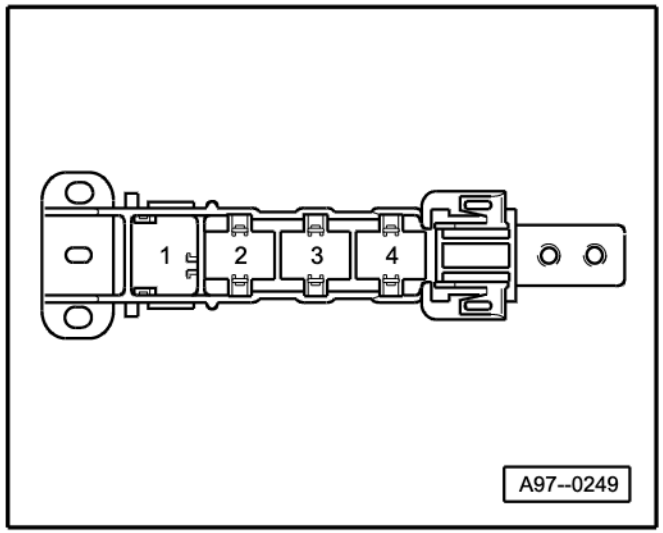

♦ under driver's seat

3 - 6-Pin Connector, green (T6d)

Protected by copyright. Copying for private or commercial purposes, in part or in whole, is not permitted unless authorised by AUDI AG. AUDI AG does not guarantee or accept any liability with respect to the correctness of information in this document. Copyright by AUDI AG.

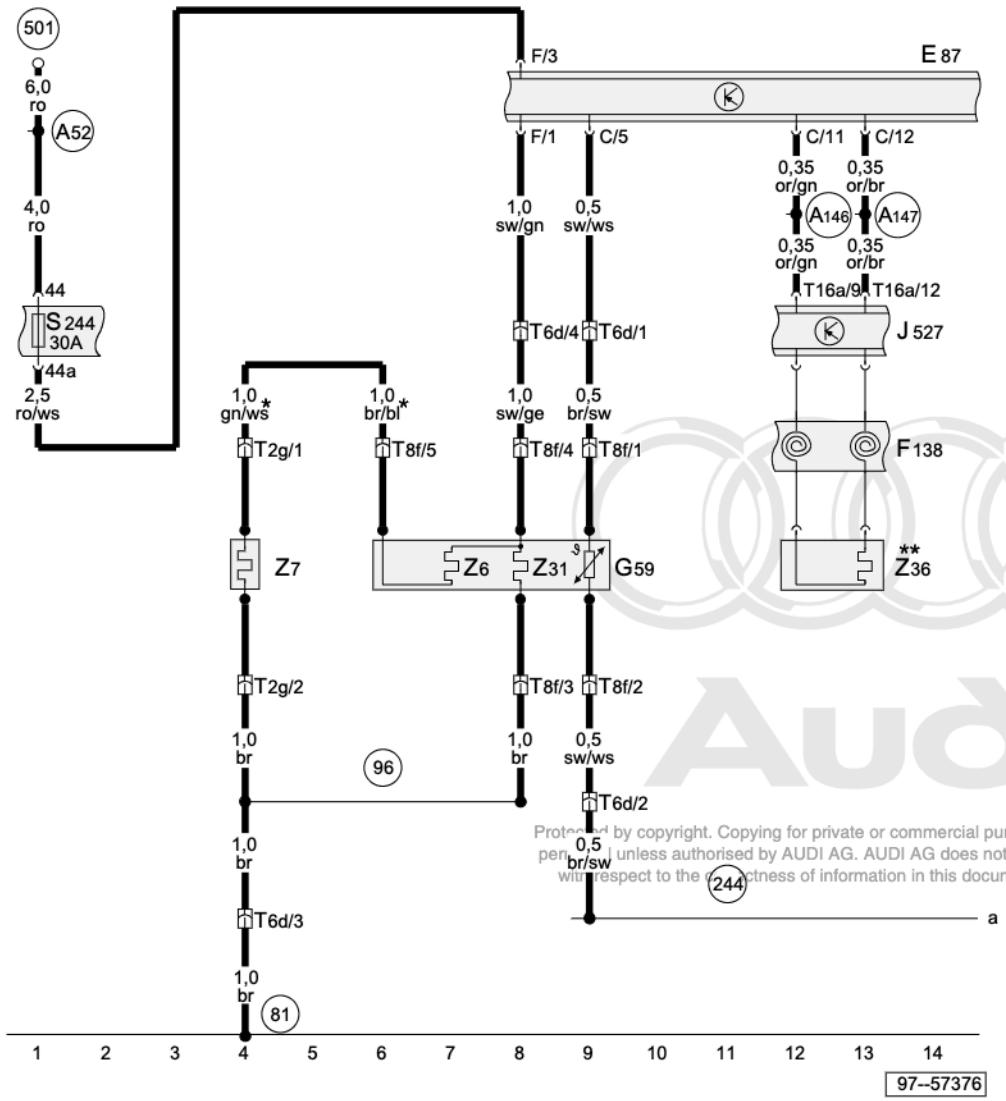

Driver's Seat Heating Element, Heater steering wheel, Fuse

E87	A/C Control Head
F138	Airbag Spiral Spring/Return Spring With Slip Ring
G59	Driver's Heated Seat Temperature Sensor
J527	Steering Column Electronic Systems Control Module
S244	Fuse in fuse holder
T2g	Double Connector, on driver's seat for driver's Backrest Heating Element
T6d	6-Pin Connector, green, seat wiring connector station, driver's seat
T8f	8-Pin Connector, on driver's seat for driver's for driver's seat Heating Element
T16a	16-Pin Connector, black, on steering Column Electronic Systems Control Module
Z6	Driver's Seat Heating Element
Z7	Driver's Backrest Heating Element
Z31	Driver's Seat Side Bolster Heater
Z36	Heater steering wheel
81	Ground connection -1-, in instrument panel wiring harness
96	Ground connection -1-, in heated seats wiring harness
244	Ground connection (sensor Ground), in wiring harness Climatronic
501	Threaded connection -2- (30), on the relay plate
A52	Plus connection -2- (30), in instrument panel wiring harness
A146	Comfort System High-bus Connection (in instrument panel wiring harness)
A147	Comfort System Low-bus Connection (in instrument panel wiring harness)
*	both is possible
**	with Heater steering wheel only

Protected by copyright. Copying for private or commercial purposes, in part or in whole, is not permitted unless authorised by AUDI AG. AUDI AG does not guarantee or accept any liability with respect to the correctness of information in this document. Copyright by AUDI AG.

ws	=	white
sw	=	black
ro	=	red
br	=	brown
gn	=	green
bl	=	blue
gr	=	grey
li	=	lilac
ge	=	yellow
or	=	orange
rs	=	pink

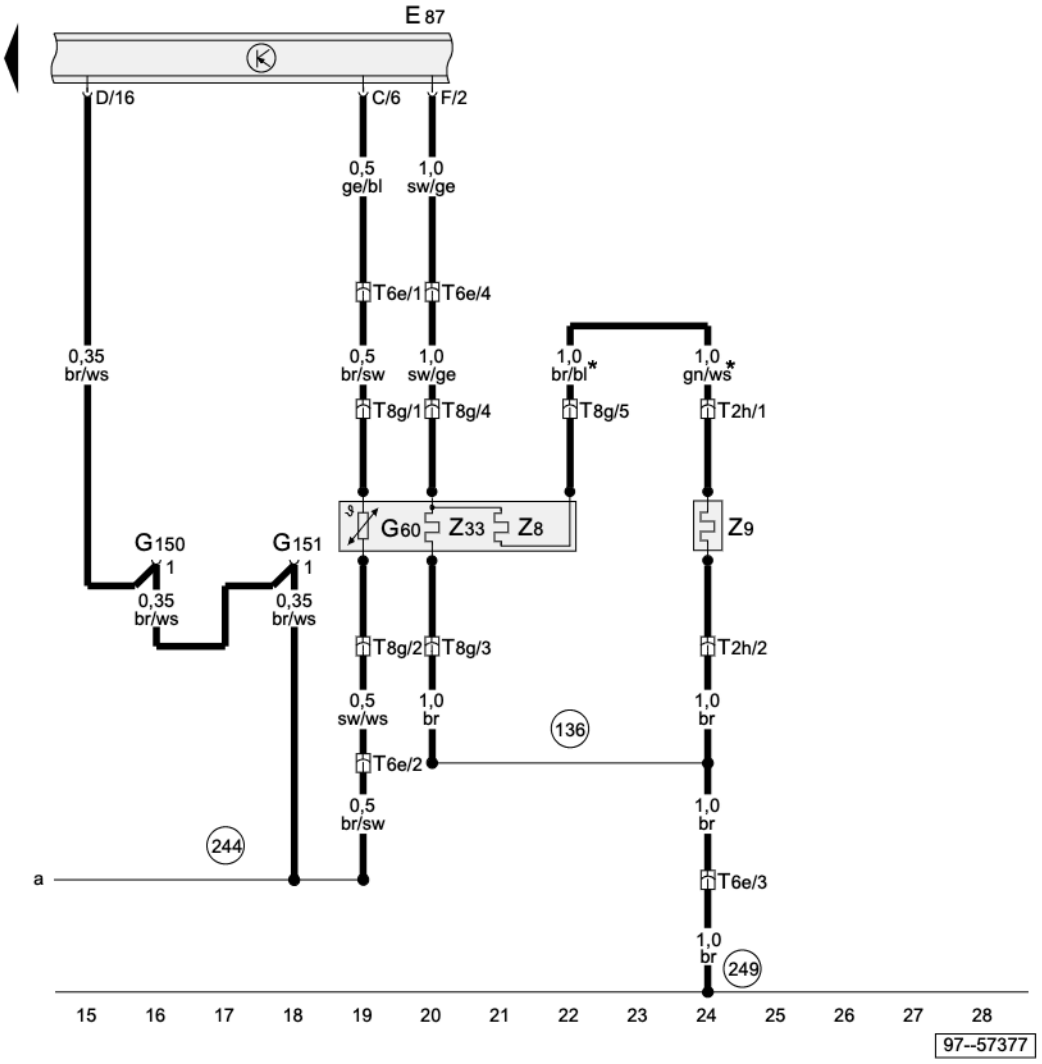

Passenger's seat Heating Element

E87	A/C Control Head
G60	Passenger's Heated Seat Temperature Sensor
G150	Left Vent Temperature Sensor
G151	Right Vent Temperature Sensor
T2h	Double Connector, black, on passenger's seat for passenger's Backrest Heating Element
T6e	6-Pin Connector, green, seat wiring connector station, passenger seat
T8g	8-Pin Connector, on passenger's seat for driver's for passenger's seat Heating Element
Z8	Passenger's seat Heating Element
Z9	Passenger's Backrest Heating Element
Z33	Passenger's seat Side Bolster Heater
136	Ground connection -2-, in heated seats wiring harness
244	Ground connection (sensor Ground), in wiring harness Climatronic
249	Ground connection -2-, in wiring harness interior
*	both is possible

Protected by copyright. Copying for private or commercial purposes, in part or in whole, is not permitted unless authorised by AUDI AG. AUDI AG does not guarantee or accept any liability with respect to the correctness of information in this document. Copyright by AUDI AG.

ws	=	white
sw	=	black
ro	=	red
br	=	brown
gn	=	green
bl	=	blue
gr	=	grey
li	=	lilac
ge	=	yellow
or	=	orange
rs	=	pink